Instruction Manual

Unique-TO Sanitary Mixproof Tank Outlet Valve

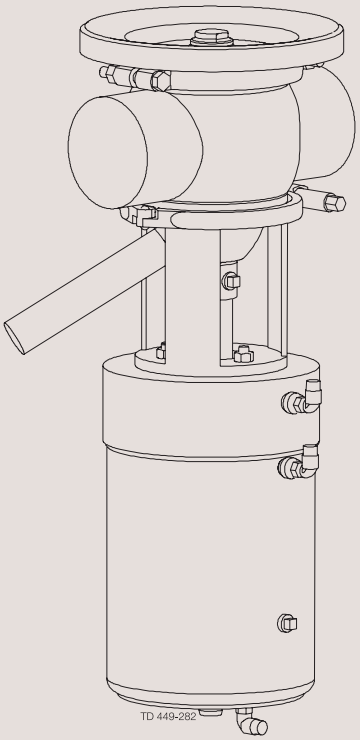

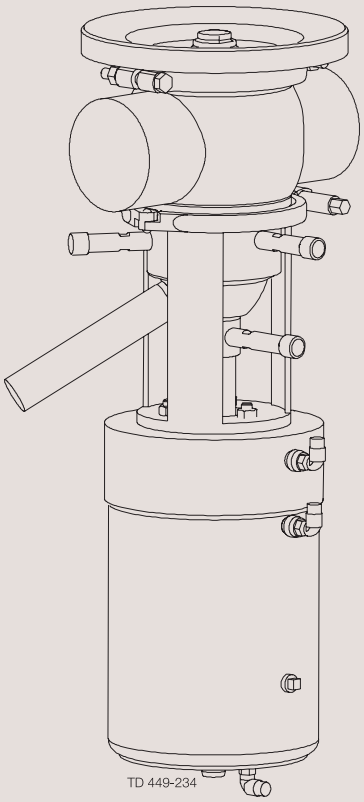

ESE00156EN2 2010-04

Original Instructions

Declaration of Conformity

CENTREX TECHNICAL SALES

The designating company

Alfa Laval Kolding
Company Name

Albuen 31, DK-6000 Kolding, Denmark
Address

+45 79 32 22 00
Phone No.

hereby declare that

Sanitary Mixproof Tank Outlet Valve	*Unique-TO*	
Denomination	Type	Year

is in conformity with the following directive

- Machinery Directive /--3,1/,B@
- Pressure Equipment Directive 97/23/EC category 1, and subjected to assessment procedure Module A.
  Diameters ≥ DN125 may not be used for fluids group 1.

Manager, Product Centres, Compact Heat Exchangers & Fluid Handling	Bjarne Søndergaard
Name	Name
Alfa Laval Kolding	B. Søndergaard
Company	Signature

Designation

The information contained herein is correct at the time of issue but may be subject to change without prior notice.

1.1 Important information
1.2 Warning signs

Unsafe practices and other important information are emphasized in this manual.
Warnings are emphasized by means of special signs.

Important information

Always read the manual before using the valve!

WARNING!
Indicates that special procedures **must** be followed to avoid severe personal injury.

CAUTION!
Indicates that special procedures **must** be followed to avoid damage to the valve.

NOTE!
Indicates important information to simplify or clarify practices.

Warning signs

General warning:

Caustic agents:

Cutting danger:

All warnings in the manual are summarized on this page.
Pay special attention to the instructions below so that severe personal injury and/or damage to the valve are avoided.

Installation

- **Always** read the technical data thoroughly (see chapter 5).
- **Always** release compressed air after use.
- **Never** touch the clip assembly or the actuator piston rod if the actuator is supplied with compressed air (see the warning label).
- **Never** stick your fingers through the valve ports if the actuator is supplied with compressed air.

Operation

- **Always** read the technical data thoroughly (see chapter 5).
- **Never** touch the clip assembly or the actuator piston rod if the actuator is supplied with compressed air (see the warning label).
- **Never** pressurise air connections (AC1, AC3) simultaneously as both valve plugs can be lifted (can cause mixing).
- **Never** touch the valve or the pipelines when processing hot liquids or when sterilizing.
- **Never** throttle the leakage outlet.
- **Never** throttle the CIP outlet, if supplied.

- **Always** handle lye and acid with great care.

Maintenance

- **Always** read the technical data thoroughly (see chapter 5).
- **Always** fit the seals correctly.
- **Always** release compressed air after use.
- **Always** remove the CIP connections, if supplied, before service.
- **Never** service the valve when it is hot.
- **Never** pressurise the valve/actuator when the valve is serviced.
- **Never** stick your fingers through the valve ports if the actuator is supplied with compressed air.
- **Never** touch the clip assembly or the actuator piston rod if the actuator is supplied with compressed air (see the warning label).
- **Never** service the valve with valve and tank/pipelines under pressure

Transportation:

Always secure that compressed air is released
Always secure that all connections is disconnected before attemt to remove the valve from the installation
Always drain liquid out of valves before transportation
Always used predesigned lifting points if defined
Always secure sufficient fixing of the valve during transportation - if special designed packaging material is available it must be used

2.1 Unpacking/intermediate storage

The instruction manual is part of the delivery.
Study the instructions carefully.
Fit the warning label supplied on the valve after installation so that it is normally visible.

Step 1
CAUTION!
Alfa Laval cannot be held responsible for incorrect unpacking.

Check the delivery for:
1. Complete valve.
2. Delivery note.
3. Warning label.

Step 2
Remove upper support.

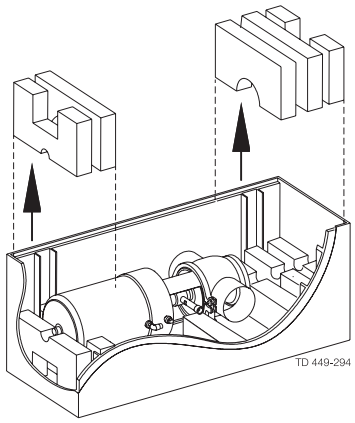

Step 3
Lift out the valve.

NOTE!
Please note weight of valve as printed on box.

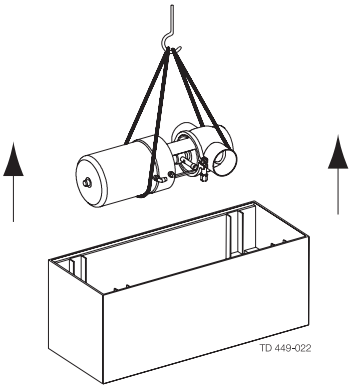

Step 4
Remove possible packing materials from the valve ports.

NOTE!
Remember to fit leakage detection pipe.

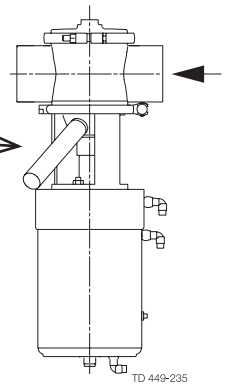

Step 5
Inspect the valve for visible transport damages.

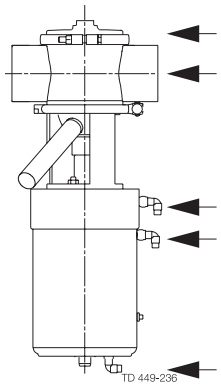

Inspection!

Step 6
Avoid damaging the air connections, the leakage outlet, the valve ports and the CIP connections, if supplied.

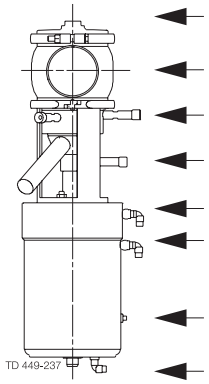

Caution!

Step 7
Disassemble according to illustrations 1 to 5
(please also see section 4.2).

1. Supply compressed air.
2. Remove clamp.
3. Release compressed air.
4. Lift out actuator with plugs.
5. Remove clamp.

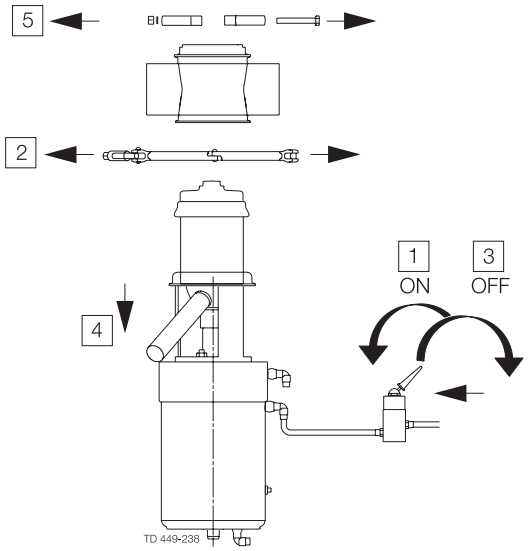

Step 8
While valve body is welded, it is recommended to store the valve safely in the box together with valve parts.
1. Place actuator and valve parts in the box.
2. Add supports.
3. Close, re-tape and store the box.

ADVISE!
Mark the valve body and box with the same number before intermediate storage.

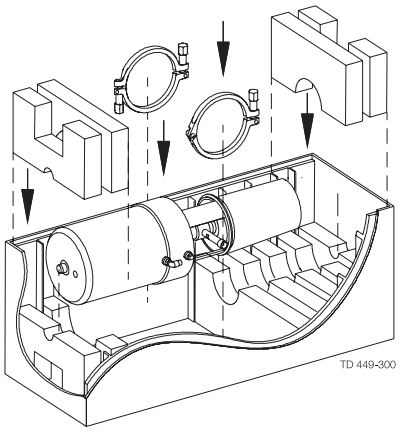

Recycling information.
• Unpacking

- Packing material consists of wood, plastics, cardboard boxes and in some cases metal straps.
- Wood and cardboard boxes can be reused, recycled or used for energy recovery.
- Plastics should be recycled or burnt at a licensed waste incineration plant.
- Metal straps should be sent for material recycling.

• Maintenance

- During maintenance oil and wear parts in the machine are replaced.
- All metal parts should be sent for material recycling.
- Worn out or defective electronic parts should be sent to a licensed handler for material recycling.
- Oil and all non metal wear parts must be taken care of in agreement with local regulations.

• Scrapping

- At end of use, the equipment shall be recycled according to relevant, local regulations. Beside the equipment itself, any hazardous residues from the process liquid must be considered and dealt with in a proper manner. When in doubt, or in the absence of local regulations, please contact the local Alfa Laval sales company.

Study the instructions carefully and pay special attention to the warnings!
The valve has ends for welding as standard but can also be supplied with fittings.

Step 1

- **Always** read the technical data thoroughly (see chapter 5).
- **Always** release compressed air after use.
- **Never** touch the clip assembly or the actuator piston rod if the actuator is supplied with compressed air (see the warning label).


TD 449-303

CAUTION!
- Fit the supplied warning label on the valve so that it is normally visible.
- Alfa Laval cannot be held responsible for incorrect installation.

NOTE!
- The leakage outlet must be turned downwards!

Step 2
Avoid stressing the valve as this can result in deformation of the sealing area and misfunction of the valve (leakage or faulty indication).

Pay special attention to:

- Vibrations.
- Thermal expansion of the tubes (especially at long tube lengths).
- Excessive welding.
- Overloading of the pipelines.

NOTE!

Please follow Alfa Laval installation guidelines (literature code ESE00040).

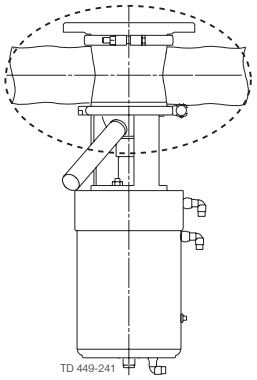

Step 3
Fittings:
Ensure that the connections are tight.

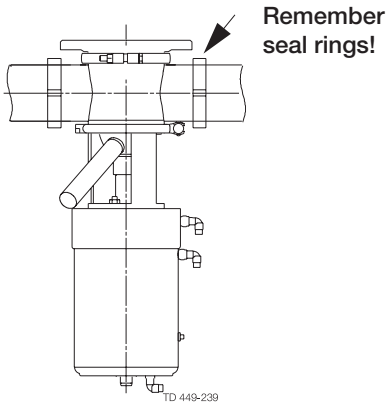

Step 4
Air connection: R 1/8” (BSP).
AC1: Cleaning of tank plug.
AC2: Open valve.
AC3: Cleaning of balanced plug.

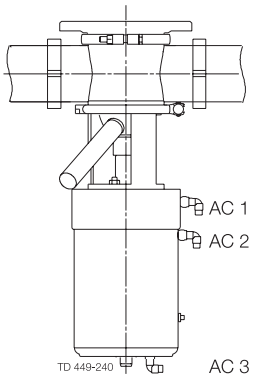

Step 5
CIP connection (optional extra):
1. See description of cleaning in section 3.3.
2. Connect CIP correctly.

NOTE!

✶= Moving parts

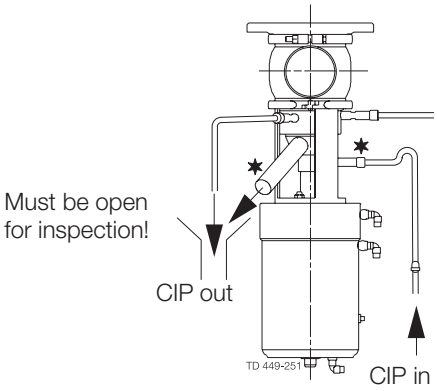

Step 6
It is important to connect CIP inlet to the small inlet nozzle to avoid built-up pressure in the cleaning chamber.

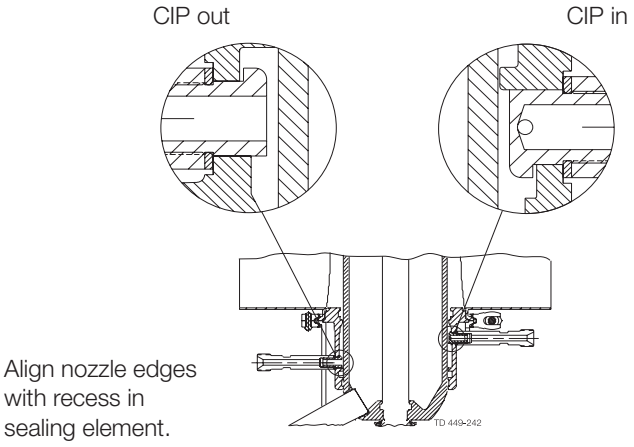

Study the instructions carefully and pay special attention to the warnings!
The valve has ends for welding as standard.
Weld carefully/aim at stressless welding to avoid deformation on sealing areas.
Check the valve for smooth operation after welding.

Step 1

Never stick your fingers in the operating parts of the valve if the actuator is supplied with compressed air.

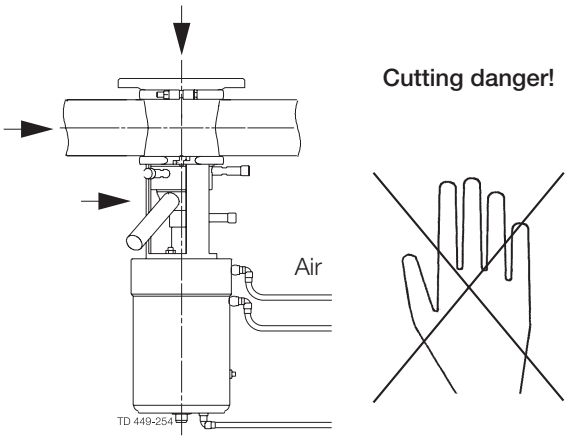

Step 2
Dismantle the valve in accordance with step 1 in section 4.2.

Step 3

Before welding the flange into the tank please note:

1. Maintain the minimum clearances “A” so that the actuator with the internal valve parts can be removed - please see later this section!

If there is a risk of foot damage, Alfa Laval recommends to leave a distance of 120 mm (4.7”) below the valve (look at the specific built-in conditions).

Bottom of tank

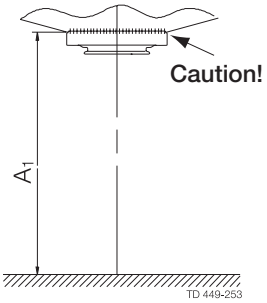

Tank flange (Standard)

Bottom of tank

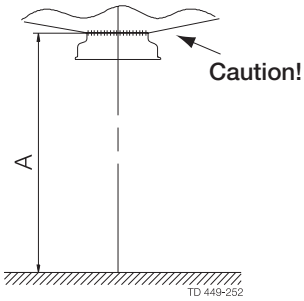

Stub flange (option)

Min. dimension Unique TO (all measures in mm) (1mm = 0.0394”)

Size	DN/OD				DN						Longstroke DN/OD		Longstroke DN	
	2”	2½”	3”	4”							2½”	3”		
	51	63.5	76.1	101.6	50	65	80	100	125	150	63.5	76.1	65	80
with tank flange (A_1)	579	646	659	753	577	652	667	755	805	890	700	713	706	721
with external cleaning and tank flange (A_1)	616	686	699	813	614	692	707	815	865	N/A	740	753	746	761
with stub flange (A)	588	655	668	762	586	661	676	764	814	899	709	722	715	730
with external cleaning and stub flange (A)	625	695	708	822	623	701	716	824	874	N/A	749	762	755	770

If ThinkTop is mounted, add 180 mm (7.1”) to dimension
N/A = Not available

2. **Always** use welding jig (can be ordered separately at Alfa Laval) to ensure precision of flange after welding. **Only** use pulsed arc welding and remember no gap between flange and tank plate .
   Tack weld **always** on the opposite side (8 segments with filler metal).
   Weld root if possible without filler metal.
   Welding of the final run must be done in 8 segments to avoid crack.
   Remember **NOT** to dismount welding jig before flange is cold.

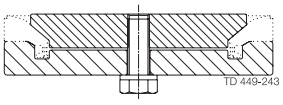

Welding jig

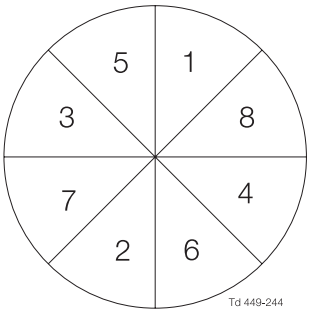

Item no.	Size		Welding tool for tank flange
9613-0999-01	2”	DN50	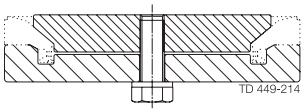
	51 mm		
9613-0999-02	2½” - 3”	DN65-DN80	
	63.5-76.1 mm		
9613-0999-03	4”	DN100-DN150	
	101.6 mm		

Step 4
Warning!
Make sure to turn the valve body correctly - conical seat downwards before welding.

NOTE!
Always weld the valve body into the pipeline, so that the seal ring (76) can be replaced.

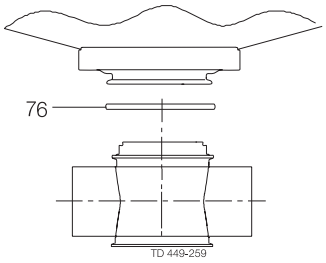

Step 5
Assemble the valve in accordance with section 4.5 after welding.
Pay special attention to the warnings and clamp torque (see section 4.5).

Step 6
Pre-use check:
1. Supply compressed air to AC1, AC2 and AC3 one by one.
2. Operate the valve several times to ensure that it runs smoothly.

Pay special attention to the warnings!

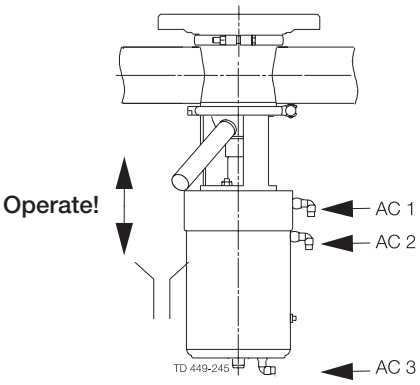

The valve is tested before delivery.
Study the instructions carefully and pay special attention to the warnings!
Pay attention to possible faults.
The items refer to the parts list and service kits section.

Step 1

- **Always** read the technical data thoroughly (see chapter 5).
- **Always** release compressed air after use.
- **Never** touch the clip assembly or the actuator piston rod if the actuator is supplied with compressed air (see the warning label).
- **Never** pressurise air connections (AC1, AC3) simultaneously as both valve plugs can be lifted (can cause mixing).

CAUTION!
Alfa Laval cannot be held responsible for incorrect operation.

Step 2

Never touch the valve or the pipelines when processing hot liquids or when sterilizing.

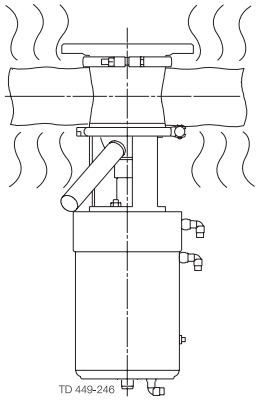

Burning danger!

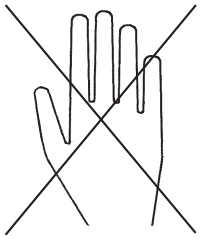

Fault finding and repair
NOTE!
Study the maintenance instructions carefully before replacing worn parts. - See “General Maintenance” section 4.1

Problem	Cause/result	Repair
Leakage at the leakage detection pipe (88)	- Particles between valve seats and plug seals (56/74) - Worn/product affected plug seal rings (56/74) - Plug not assembled correctly	- Remove the particles - Check the plug seals - Replace the plug seals - Change rubber grade - Assemble plug, see step 3 section 4.5
Leakage at sealing element (48)/ upper plug (94)	Worn/product affected o-rings/lip seal (sizes 38/39/46/49)	- Replace the o-rings/lip seal - Change rubber grade - Clean and if necessary replace guide ring (45)
Leakage at clamp (64) and (65)	- Too old/product affected o-rings (76 and 47) valve body - Loose clamp (64) or (65)	- Replace the o-rings - Change rubber grade - Tighten the clamp (max. 10 Nm)
CIP leakage	Worn o-rings (40/67)	Replace the o-rings
Leakage at spindle clamp (43)	Damaged o-ring (39) Worn/product affected lip seal (57)	- Replace the o-ring - Replace the plug seals - Change rubber grade
Tank plug not returning to closed position	- Wrong rubber grade - Wrongly fitted gasket - Mounted incorrectly (see section 2.3)	- Change rubber grade - Fit new gasket correctly - Correct installation
Plug returns with uneven movements (slip/stick effect)	- Wrong rubber grade - Wrongly fitted gasket - Mounted incorrectly (see section 2.3)	- Change rubber grade - Fit new gasket correctly - Correct installation

The valve is designed for cleaning in place (CIP). CIP = Cleaning In Place.
Study the instructions carefully and pay special attention to the warnings!
NaOH = Caustic Soda.
HNO_3 = Nitric acid.

Step 1

Always handle lye and acid with great care.

Caustic danger!

Always use rubber gloves!

Always use protective goggles!

Step 2

Never touch the valve or the pipelines when sterilizing.

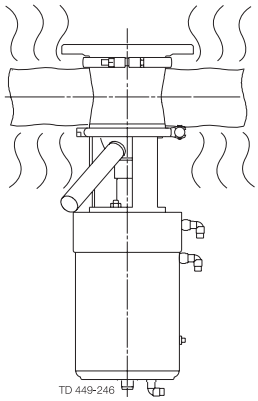

Burning danger!

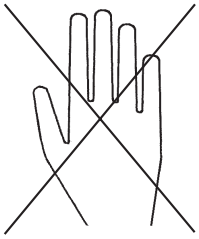

Step 3

- **Never** throttle the leakage outlet.
- **Never** throttle the CIP outlet, if supplied. (Risk of mixing due to overpressure).

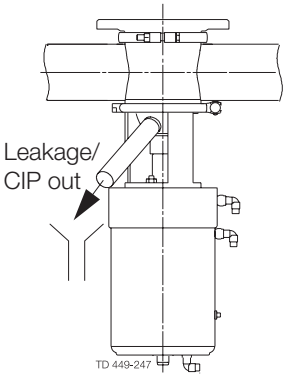

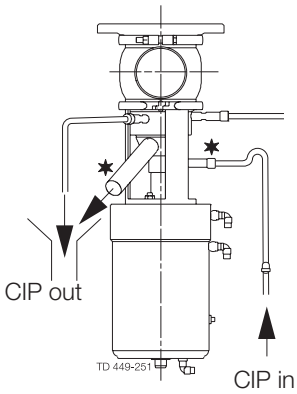

Step 4
Examples of cleaning agents:
Use clean water, free from chlorides.

1. 1% by weight NaOH at 70° C (158°F).

1 kg (2.2 lb) NaOH	+	100 l (26.4 gal) water	= Cleaning agent.
2.2 l (0.6 gal) 33%NaOH	+	100 l (26.4 gal) water	= Cleaning agent.

2. 0.5% by weight HNO_3 at 70° C (158°F).

0.7 l (0.2 gal) 53% HNO_3	+	100 l (26.4 gal) water	= Cleaning agent.

Internal leakage in the valve is externally visible by means of the leakage outlet.
Study the instructions carefully.

Step 5

1. Avoid excessive concentration of the cleaning agent
   ⇒ **Dose gradually!**
2. Adjust the cleaning flow to the process
   Milk sterilization/viscous liquids
   ⇒ **Increase the cleaning flow!**

Step 6

Advisory seat lift cleaning periods:
Cleaning periods of 1-2 seconds per CIP sequence.

Product	Periods
Milk	1-2
Yoghurt	3-5
Beer	2-5
Cold wort	5-10

Step 7

Always rinse well with clean water after the cleaning.

Always rinse!

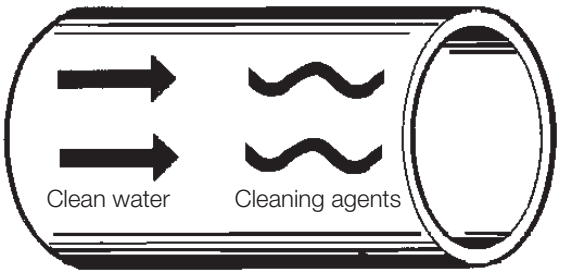

Step 8

NOTE!

The cleaning agents must be stored/disposed of in accordance with current rules/directives.

Pay special attention to spillage of hot cleaning fluid/water.

1. Closed valve

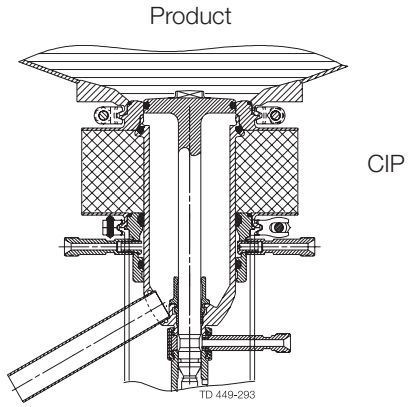

2. Seat lift cleaning with tank plug (optional)

(see step 6 page 19)

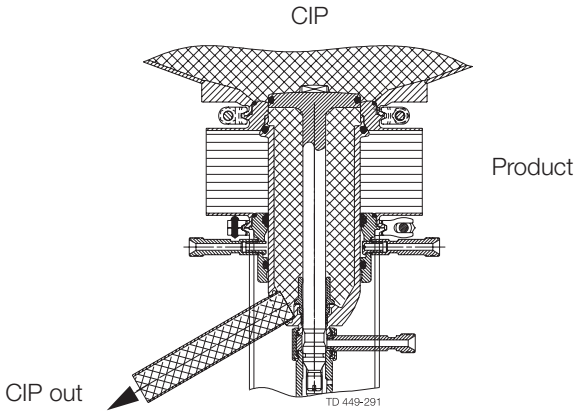

3. Open valve

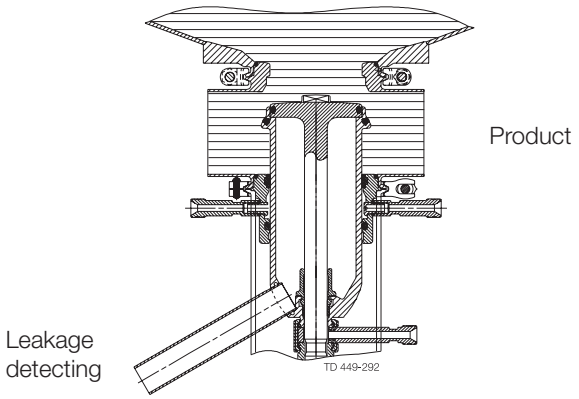

4. Seat lift cleaning with balanced plug

(see step 6 page 19)

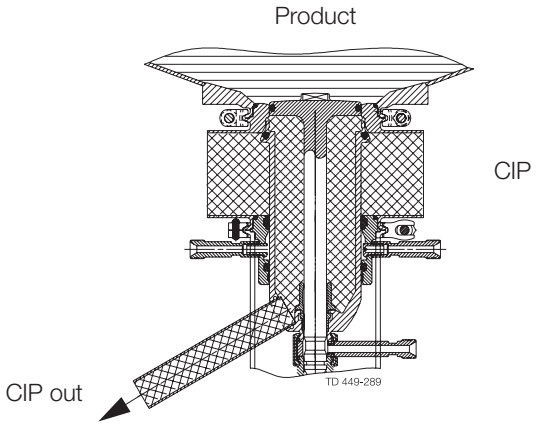

Maintain the valve/actuator regularly.
Study the instructions carefully and pay special attention to the warnings!
Always keep spare rubber seals and guide rings in stock. Store seals in closed bag.
The items refer to the parts list and service kits section.

Step 1

- **Always** read the technical data thoroughly (see chapter 5).
- **Always** fit the seals correctly (risk of mixing).
- **Always** release the compressed air after use.
- **Always** remove the CIP connections, if supplied, before service.

NOTE!
All scrap must be stored/disposed of in accordance with current rules/directives.

Step 2

- **Never** service the valve when it is hot.
- **Never** service the valve with valve/actuator under pressure.
- **Never** service the valve with fluid in the tank.

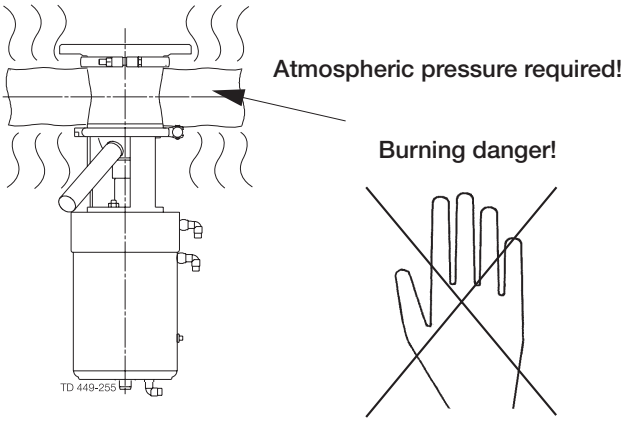

Step 3

Never stick your fingers in operating parts of the valve if the actuator is supplied with compressed air.

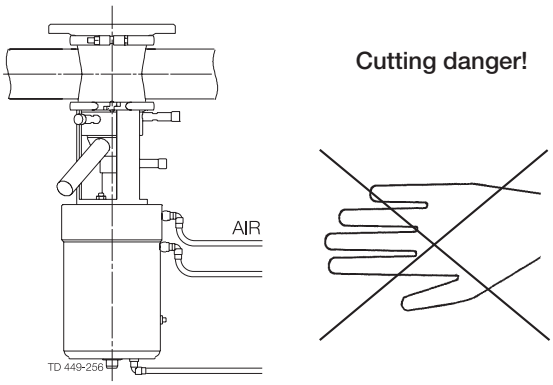

Step 4

Never touch the clip assembly or the actuator piston rod if the actuator is supplied with compressed air (see the warning label).

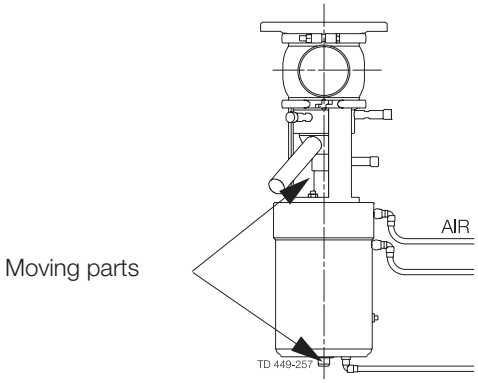

The valve is designed so that internal leakages do not result in the products becoming mixed.
Internal leakage in the valve is externally visible.
Study the instructions carefully.
Always keep spare rubber seals and guide rings in stock. Check the valve for smooth operation after service.

Recommended spare parts: Service kits (see chapter 6)
Order service kits from the service kits section (see chapter 6)
Ordering spare parts: Contact the Sales Department.

	Valve rubber seals	Valve plug seals	Valve guide rings
Preventive maintenance	**Replace after 12 months(*)**	**Replace after 12 months(*)**	Replace when required
Maintenance after leakage (leakage normally starts slowly)	**Replace after production cycle**	**Replace after production cycle**	
Planned maintenance	- Regular inspection for leakage and smooth operation - Keep a record of the valve - Use the statistics for planning of inspections	- Regular inspection for leakage and smooth operation - Keep a record of the valve - Use the statistics for planning of inspections	Replace when required
Lubrication	**When assembling** Klüber Paraliq GTE 703 or similar USDA H1 approved oil/grease (**) (suitable for EPDM)	**When assembling** Klüber Paraliq GTE 703 or similar USDA H1 approved oil/grease (**) (suitable for EPDM)	**None**

NOTE!
Lubricate thread in valve plug parts with Klüber Paste UH1 84-201 or similar.
(*) Depending on working conditions! Please contact Alfa Laval.

(**) All products wetted seals.

Repairing of actuator:
- The actuator is maintenance-free but repairable.
- If repair is required, replacing all actuator rubber seals is recommended.
- Lubricate seals with Molykote Longterm 2 (black).
- To avoid possible black remains on pos. 1 and 29, Alfa Laval recommends Klüber Paraliq GTE703 (white) for these two positions.

Pre-use check
1. Supply compressed air to AC1, AC2 and AC3 one by one.
2. Operate the valve several times to ensure that it operates smoothly.

Pay special attention to the warnings!

Operate!

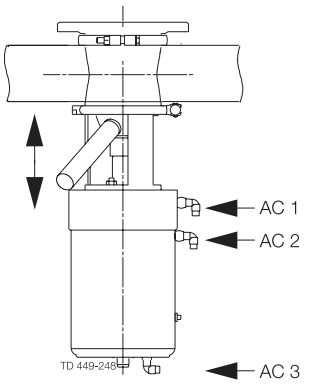

Study the instructions carefully.
The items refer to the parts list and service kits section.
Handle scrap correctly.
Replace seals if necessary.

Step 1
Disassemble valve acc. to illustrations (1 to 5).
1. Supply compressed air to AC2.
2. Loosen and remove clamp (64).
3. Release compressed air.
4. Lift out the actuator together with the internal valve parts from valve body (51).
5. Loosen and remove clamp (65) and valve body (51).
6. Pull out tube (88) from balanced plug (94) and remove o-ring (89) from tube.
7. When tank flange:
   Pull out o-ring (76) from valve body (51).
   When stub flange:
   Pull out o-ring (91) from stub flange (92).

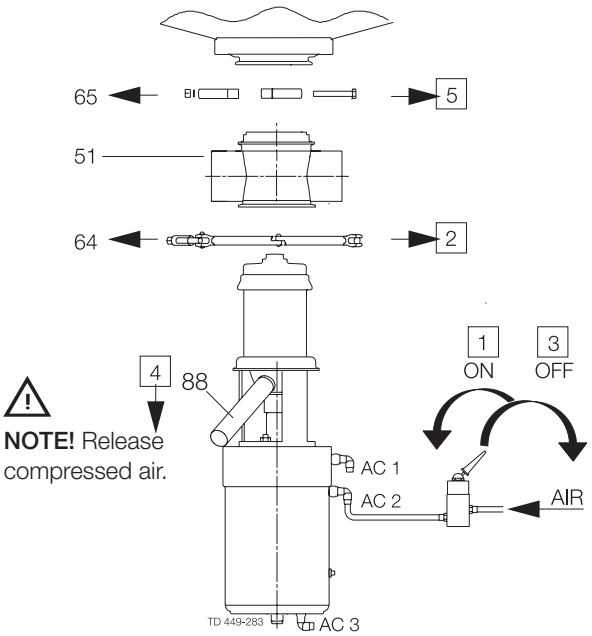

Step 2
2A:
If air fitting AC1 is present, supply compressed air and follow procedure 2A.
1. Supply compressed air for AC1.
2. Loosen tank plug (93) while counterholding upper stem (1).
3. Remove the tank plug.
4. Release compressed air.
5. Replace o-ring (38).

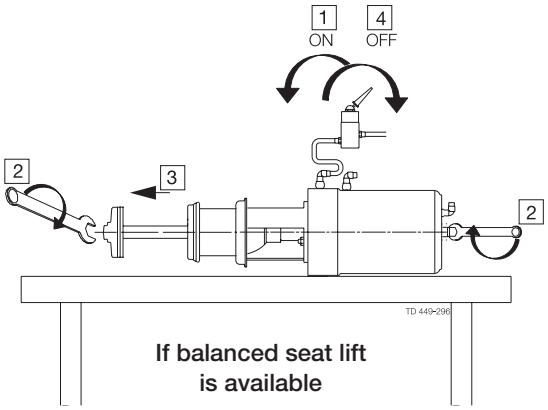

2B:
If no air fitting AC1 is present, follow procedure 2B.
1. Push sealing element (48) free of intermediate piece (37).
2. Loosen tank plug while counterholding upper stem
3. Remove the tank plug (93).
4. Replace o-ring (38).

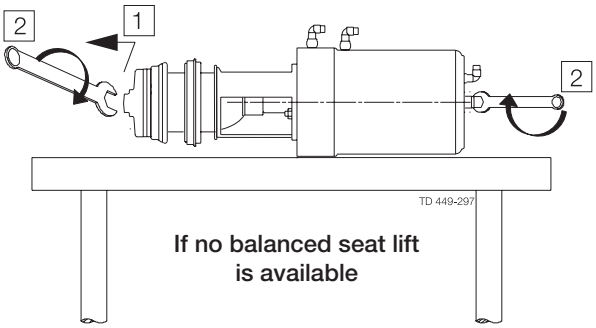

NOTE!
For replacement of seal ring (74), please see section 4.3.

Step 3

Remove coupling system and balanced plug according to illustrations (1 to 4).

1. Unscrew flushing tube (41) (or plug (15) if no CIP). Remove o-ring (40).
2. Pull down lock (44) over piston rod (29).
3. Pull away clamps (43) from spindle liner (42).
4. Pull out balanced plug (94). Make sure spindle liner is free of both piston rod and balanced plug. If external CIP to leakage chamber: Remove o-rings (39).

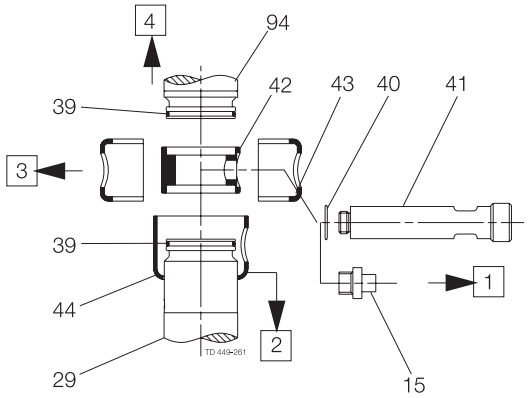

Step 4

1. If present, unscrew flushing tubes (66) and remove o-rings (67) and nozzles (68 + 69).
2. Pull out sealing element (48) from intermediate piece (37).
3. Pull out o-ring (47), lip seal (49) and o-ring (46) from sealing element.

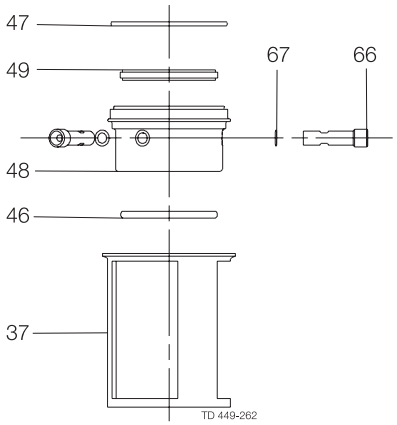

Step 5

Remove lip seal (57) (or spray nozzle (58) if valve is supplied with Spiral-Clean). For removal and replacement of seal ring (56), please see section 4.3.

NOTE!

For valve size DN/OD51 & DN50:
Lip seal (57) can only be mounted with special tool, please contact Alfa Laval.

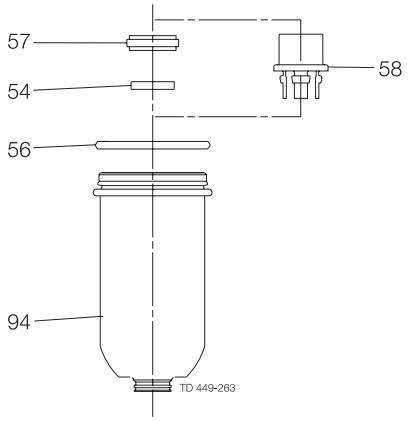

Mounting tool for lip seal
(Item no. 9613-0040-01)

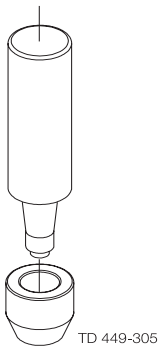

Study the instructions carefully.
The items refer to the parts list and service kits section.
Handle scrap correctly.

Step 1
Cut and remove old seal ring (74) using a knife, screwdriver or similar. Be careful not to scratch the plug.

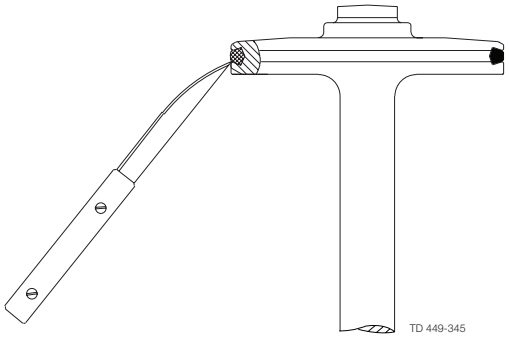

Step 2
Pre-mount seal ring as shown on drawing.

Rotate along circumference to fix gasket as shown in the picture

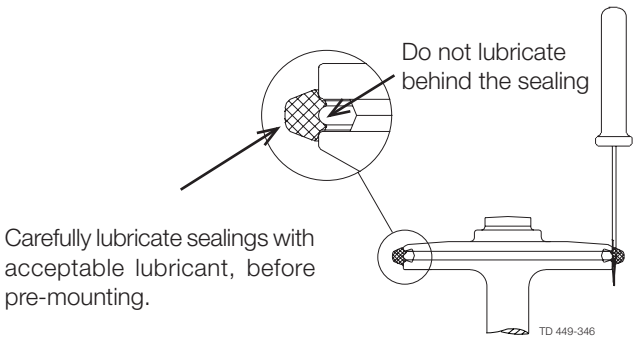

Item numbers for radial tool			
Seat ø53.3	Seat ø81.3	Seat ø100.3	Seat ø115.3
9613-4260-01	**9613-4260-02**	**9613-4260-03**	**9613-4260-04**

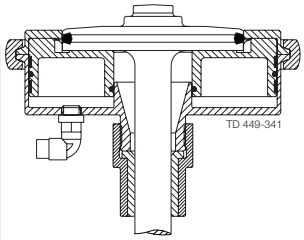

Step 3
Place lower tool part.

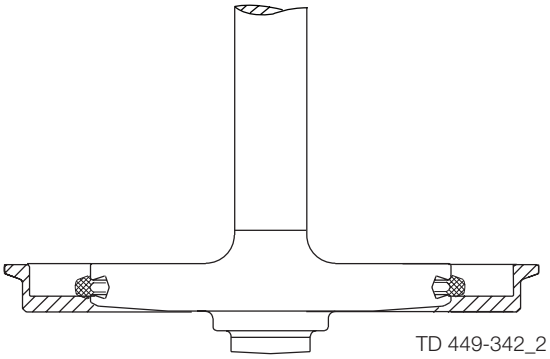

Step 4

1. Place upper tool part including piston.
2. Clamp the two tool parts together.

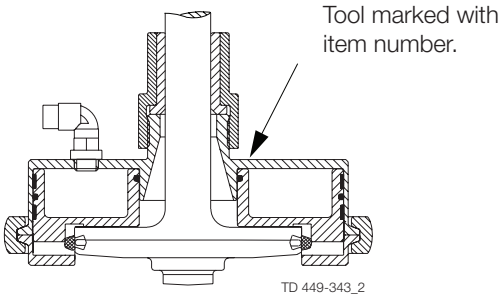

Step 5

1. Supply compressed air.
2. Release compressed air.
3. Remove tool parts.

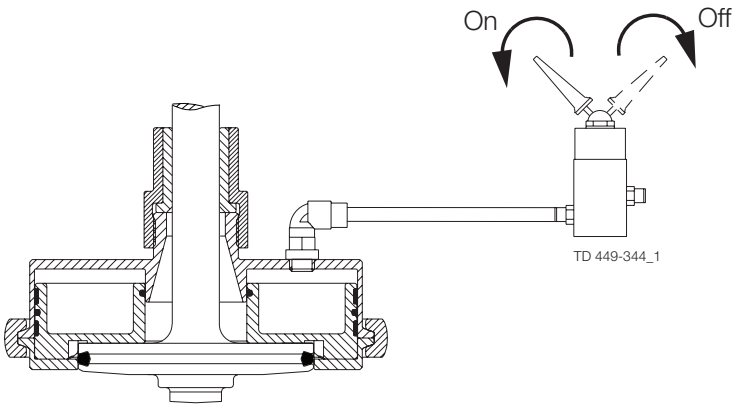

Step 6

Inspect the seal to ensure it does not twist in the groove, and press in the 4 outsticking points with a screwdriver!

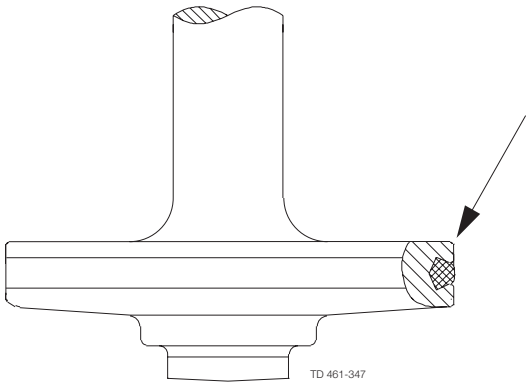

4.4 Balanced plug, replacement of axial seal

Study the instructions carefully.
The items refer to the parts list and service kits section.
Handle scrap correctly.

Step 1
Remove old seal ring (56) using a knife, screwdriver or similar.
Be careful not to scratch the plug.

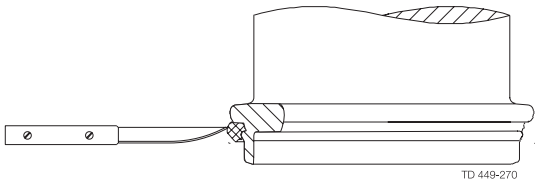

Step 2
Pre-mount seal ring as shown on drawing.

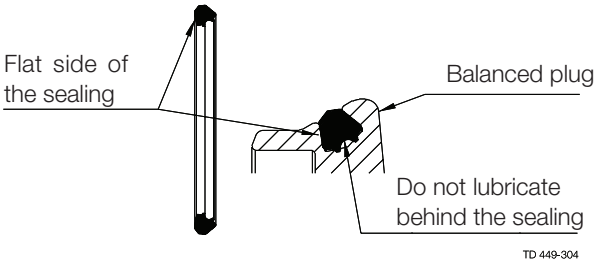

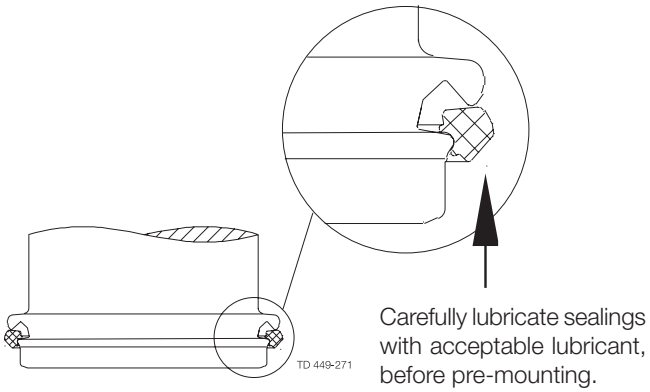

Item no.	Item no.	Item no.	Item no.	
Seat ø53.3	**Seat ø81.3**	**Seat ø100.3**	**Seat ø115.3**	**Tool for axial sealing, upper plug**
9613-0505-01	9613-0505-02	9613-0505-08	9613-0505-03	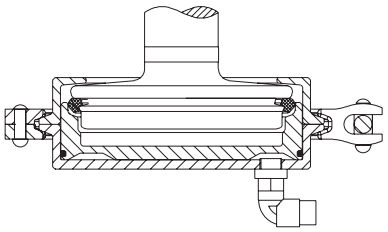

Step 3
Place tool part 1.

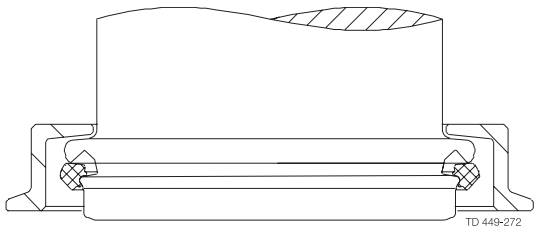

Step 4

1. Place tool part 2 including piston.
2. Clamp the two tool parts together.

Tooling marked with item number

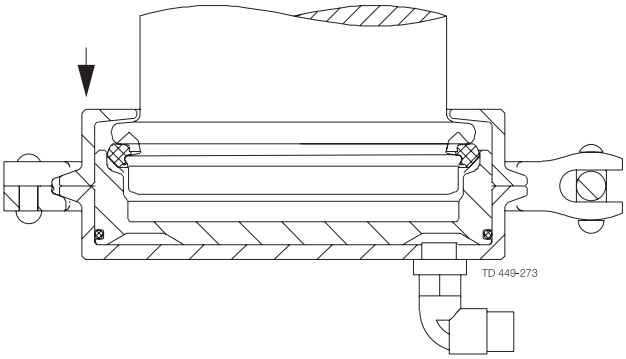

Step 5

1. Supply compressed air.
2. Release compressed air.
3. Rotate the tool 45° with regards to the plug.
4. Supply compressed air.
5. Release compressed air and remove tool.

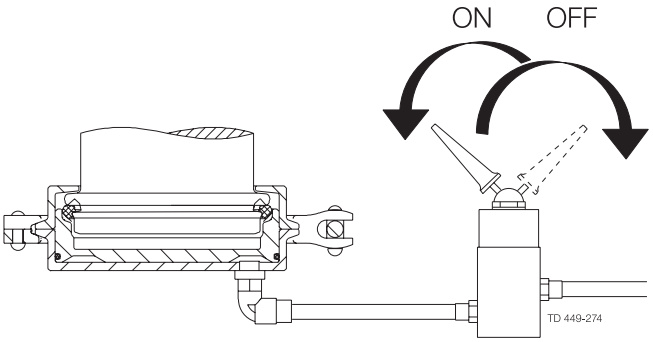

Step 6

1. Inspect the seal.
2. Release air at 3 different positions of the circumference.

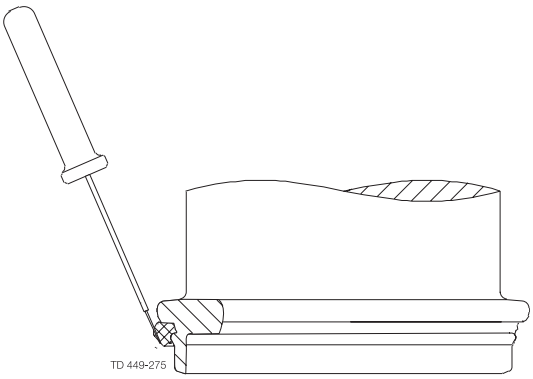

Study the instructions carefully.
The items refer to the parts list and service kits section.
Handle scrap correctly.
Replace seals if necessary.

Step 1

1. Fit o-ring (47) (do not twist), lip seal (49) and o-ring (46) in sealing element (48) (Lubricate with Klüber Paralique GT 703).
   NOTE: The o-ring should be gently pressed into the groove
2. Fit sealing element in intermediate piece (37).
3. Place o-rings (67) and mount flushing tubes (66). Be sure to align nozzles (68 + 69) towards recess.

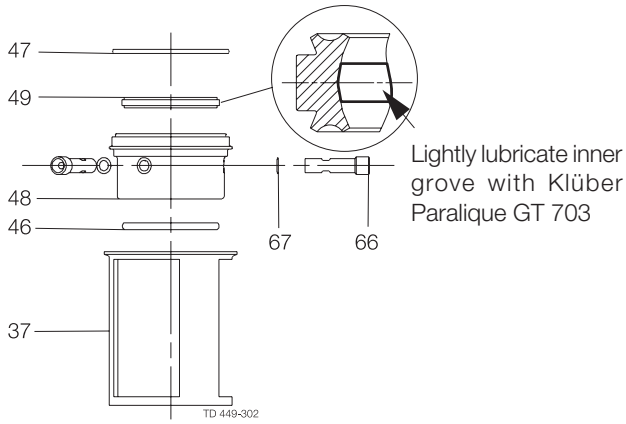

Step 2

1. Place lip seal (57) in upper plug (or spray nozzle if the valve has Spiral**Clean**) and the o-ring (38) in the lower plug.
2. Press tank plug (93) rapidly into balanced plug (94) through the lip seal.
   NOTE: Do not damage the lips when tank plug (93) with o-ring (38) passes the lip seal.

NOTE!
For valve size DN/OD51 & DN50:
Lip seal (57) can only be mounted with special tool, please contact Alfa Laval.

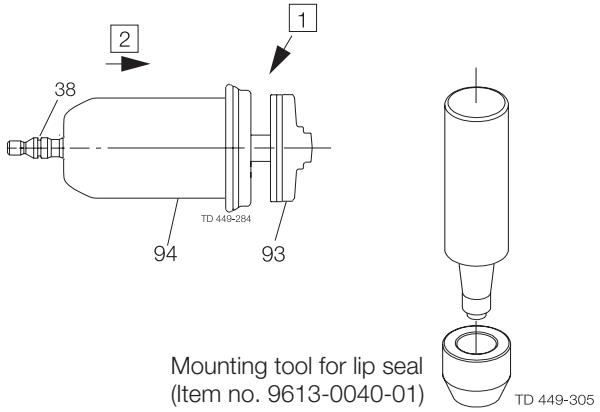

Step 3

Place coupling system and balanced plug according to illustrations (1 to 4).

1. Push lock (44) up over piston rod (29).
2. If external CIP to leakage chamber: Place o-rings (39).
3. Place spindle liner (42) on piston rod. Fit balanced plug (94).
4. Mount clamps (43) on spindle liner (42).
5. Fit lock (44).
6. Fit o-ring (40). Fit flushing tube (41) (or plug (15) if no CIP).

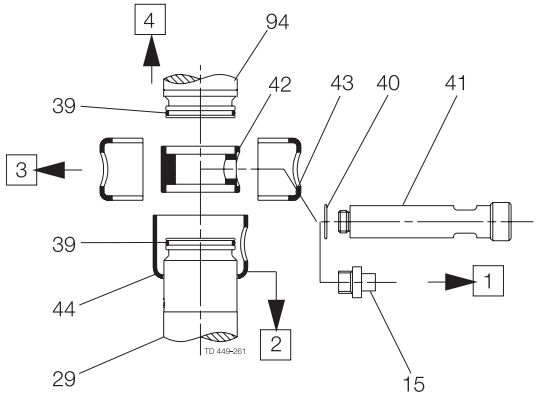

Step 4

Recommended torque values for fitting balanced and tank plug parts

Dimension	Torque (Nm)/(lbf-ft)
51 mm/2”/DN 50	5/(3.7)
All others	20/(14.8)

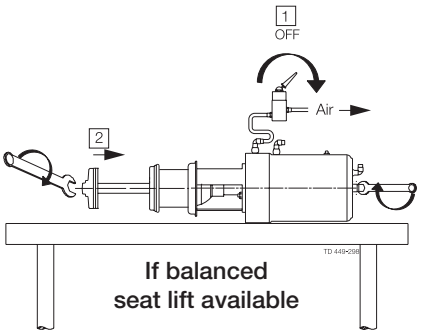

If balanced seat lift available

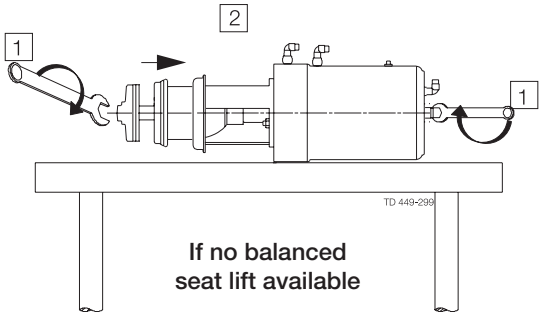

If no balanced seat lift available

Never service the valve with valve and tank/pipelines under pressure.

Step 5

- **Never** stick your fingers through the valve ports if the actuator is supplied with compressed air.
- **Always** supply compressed air, before demounting the valve.

Reassemble valve according to illustrations (1-5).

If tank flange:

1A. Fit o-ring (76) on valve body (51) and mount valve body in tank flange and tighten clamp (65)
(Maximum torque for clamp bolts: 17 Nm/13 lbf ft)

OR if stub flange:

1B. Fit o-ring (91) in stub flange (92) and mount valve body (51) in stub flange and tighten clamp (65).
(Maximum torque for clamp bolts: 17 Nm/13 lbf ft)

2. Supply compressed air and mount the actuator together with the internal valve parts.
3. Fit and tighten clamp (64).
(Maximum torque for clamp nut: 10Nm/7.4 lbf-ft)
4. Release compressed air.
5. Fit o-ring (89) on tube (88) and mount tube (88) in balanced plug (94).

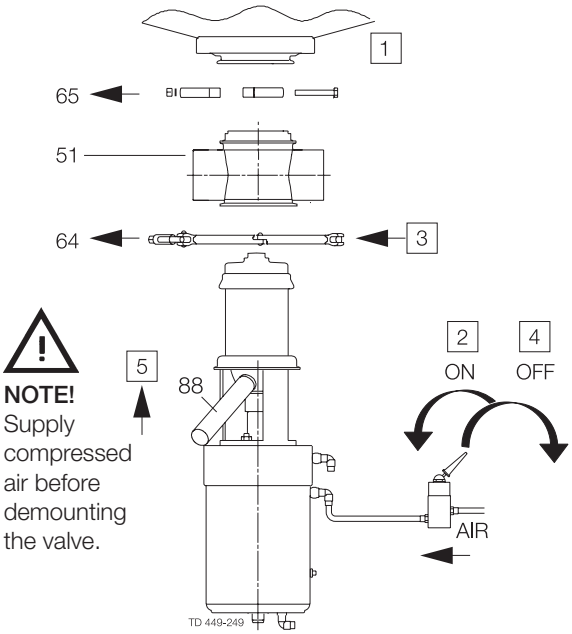

4.6 Dismantling of actuator

Study the instructions carefully.
The items refer to the parts list and service kits section.
Handle scrap correctly.
Replace seals if necessary.

Step 1

1. Dismantle the valve in accordance with instructions in section 4.2
   Pay special attention to the warnings!
2. The actuator is now ready for service.
   Please see drawing when dismantling according to steps 2 to 6 on this page.

Step 2

1. Remove nuts (36) and washers (35).
2. Pull out intermediate piece (37) from the actuator.
3. Remove cover disk (25).
4. Remove plug (86) with o-rings (85 & 87) from intermediate piece (37).

Step 3

1. Remove piston rod (29), bottom (21) and lower piston (30).
2. Separate the three parts.
3. Remove o-rings (20, 22 and 23) from bottom, o-rings (33 and 31) and guide ring (32) from lower piston as well as o-ring (28) from piston rod.
4. Remove spring assembly (14).

Step 4

1. Remove inner stem (27), main piston (17) and distance spacer (11) if present. Remove guide ring (18) and o-ring (19).
2. Remove spring assembly (10).

Step 5

NOTE! Not on actuator 3.

1. Unscrew screws (2) (are glued!).
2. Remove stop (4).
3. Remove upper piston (8). Remove o-rings (7 and 9).

Step 6

Remove o-ring (5) and guide ring (6).

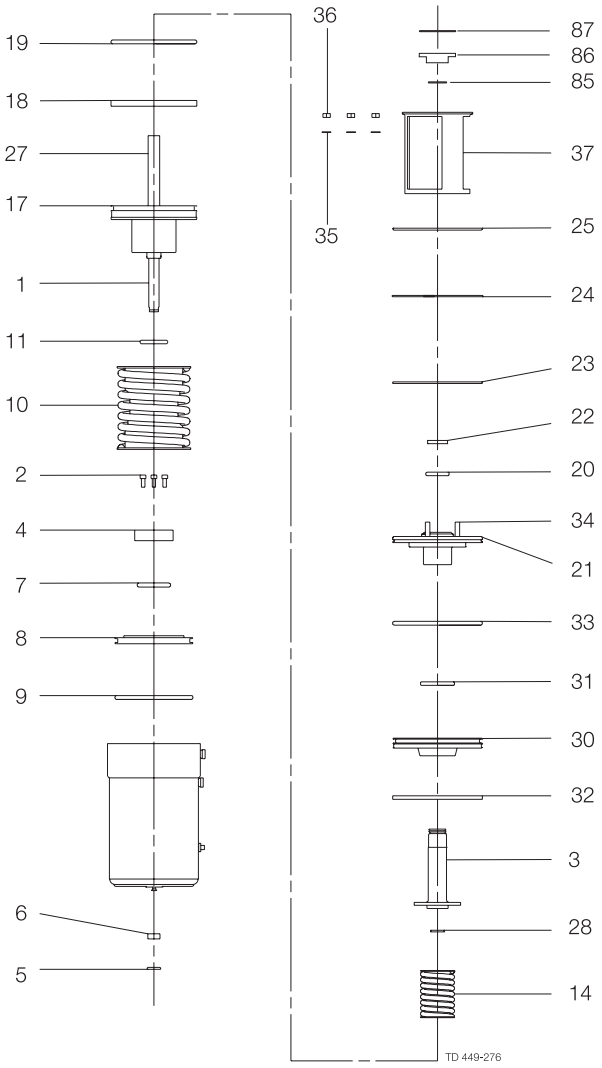

Study the instructions carefully.
The items refer to the parts list and service kits section.
Replace seals if necessary.
Lubricate the rubber seals before fitting them.

Step 1
Please see drawing when reassembling according to steps 2 to 5 on this page.

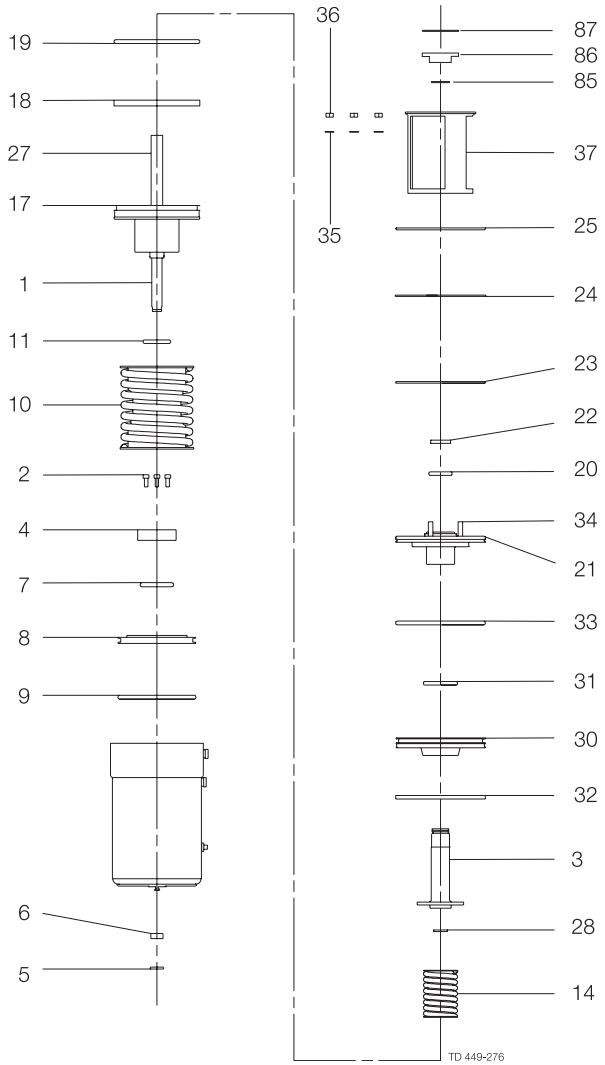

Step 2
1. Fit guide ring (6) and o-ring (5).

NOTE! Not on actuator 3:
2. Fit o-rings (7 and 9). Place upper piston (8).
3. Fit stop (4).
4. Tighten screws (2).(Secure with glue)

Step 3
1. Place spring assembly (10).
2. Fit o-ring (19) and guide ring (18). Mount distance spacer (11), main piston (17) and inner stem (27).

Step 4
1. Fit spring assembly (14).
2. Fit o-ring (28) in piston rod, fit o-rings (33 and 31) and guide ring (32) in lower piston and fit o-rings (20, 22 and 23) in bottom.
3. Fit piston rod (29), lower piston (30) and bottom (21).
4. Mount the three parts.

Step 5
1. Fit retaining ring (24).
2. Fit cover disk (25).
3. Mount intermediate piece (37) on actuator.
4. Fit and tighten nuts (36) and washers (35).
5. Fit o-rings (85 & 87) in plug (86) and fit plug (86) in intermediate piece (37).

5.1 Technical data

It is important to observe the technical data during installation, operation and maintenance.
Inform the personnel about the technical data.

Data	
Max. product pressure:	1000 kPa (10 bar) (145 psi)
Min. product pressure:	Full vacuum
Recommended min. pressure for Spiral**Clean**:	2 bar (29 psi) - max. 8 bar (116 psi)
Temperature range:	-5°C to +125°C (23°F to 257°F) - NBR only up to 85°C (175°F)
Air pressure:	Max. 800 kPa (8 bar) (116 psi)
Products acc. to PED 97/23/EC	Category I, Fluids group 1, DN ≥ 125 only Fluids group 2

Size	DN/OD				DN						Longstroke			
											DN/OD		DN	
ISO-DIN	51	63.5	76.1	101.6	50	65	80	100	125	150	63.5	76.1	65	80
Air consumption for Balanced Seat-lift														
Litre = volume at atmosphere pressure	0.20	0.40	0.40	0.62	0.20	0.40	0.40	0.62	0.62	0.62	0.40	0.40	0.40	0.40
Gallons = volume at atmosphere pressure	0.05	0.11	0.11	0.16	0.05	0.11	0.11	0.16	0.16	0.16	0.11	0.11	0.11	0.11
Air consumption for Tank Seat-lift														
Litre = volume at atmosphere pressure	1.10	0.13	0.13	0.21	1.10	0.13	0.13	0.21	0.21	0.21	0.13	0.13	0.13	0.13
Gallons = volume at atmosphere pressure	0.29	0.03	0.03	0.06	0.29	0.03	0.03	0.06	0.06	0.06	0.03	0.03	0.03	0.03
Air consumption for Main Movement														
Litre = volume at atmosphere pressure	0.86	1.63	1.63	2.79	0.86	1.62	1.62	2.79	2.79	2.79	1.63	1.63	1.62	1.62
Gallons = volume at atmosphere pressure	0.23	0.43	0.43	0.74	0.23	0.43	0.43	0.74	0.74	0.74	0.43	0.43	0.43	0.43
Kv-value for Balanced CIP Seat-lift [m^3/h]	1.50	2.50	2.50	1.90	1.50	2.50	2.50	1.90	3.70	3.70	2.50	2.50	2.50	2.50
CV-value for Balanced CIP Seat-lift [GPM]	6.60	11.0	11.0	8.36	6.6	11.0	11.0	8.36	16.3	16.3	11.0	11.0	11.0	11.0
Kv-value for Tank Seat-lift [m^3/h]	0.90	1.90	1.90	1.40	0.90	1.90	1.90	1.40	3.10	3.10	1.90	1.90	1.90	1.90
CV-value for Balanced Tank Seat-lift [GPM]	3.96	8.36	8.36	6.16	3.96	8.36	8.36	6.16	13.7	13.7	8.36	8.36	8.36	8.36
Kv-value for SpiralClean Spindle CIP [m^3/h]	0.12	0.12	0.12	0.12	0.12	0.12	0.12	0.12	0.12	0.12	0.12	0.12	0.12	0.12
CV-value for SpiralClean Spindle CIP [GPM]	0.53	0.53	0.53	0.53	0.53	0.53	0.53	0.53	0.53	0.53	0.53	0.53	0.53	0.53
Kv-value for SpiralClean External CIP in leakage chamber [m^3/h]	0.25	0.29	0.29	0.29	0.25	0.29	0.29	0.29	0.29	0.29	0.29	0.29	0.29	0.29
CV-value for SpiralClean External CIP in leakage chamber [GPM]	1.10	1.28	1.28	1.28	1.10	1.28	1.28	1.28	1.28	1.28	1.28	1.28	1.28	1.28

NOTE!
Formula to estimate CIP flow during seat lift (for liquids with comparable viscosity and density to water):

		(US measurements)	
Q =	$Kv \bullet \sqrt{\Delta p}$	Q =	$Cv \bullet \sqrt{\Delta p}$
Q =	CIP - flow (m^3/h).	Q =	CIP - flow (gpm).
Kv =	Kv value from the above table.	Cv =	Cv value from the above table.
Δ p =	CIP pressure (bar).	Δ p =	CIP pressure (psi).
Cv =	1.163 x Kv gpm	Cv =	1.163 x Kv gpm
1 bar =	14.5 psi	1 bar =	14.5 psi

Materials		
Product wetted steel parts:	Acid-resistant steel AISI 316L.	
Other steel parts:	Stainless steel AISI 304	
Product wetted parts:	EPDM, HNBR, NBR or FPM.	
Other seals:	CIP seals: EPDM.	
Actuator seals:	NBR.	
Surface finish:	Standard:	Internal/external Ra < 1.6 (64 µ”)
	Optional:	Internal bright/external standard Ra < 0.8 (32 µ”)
	3A (US Standard version:	Internal/external bright (internal polished) Ra < 0.8 (32 µ”)

NOTE! The Ra-values are only for the internal surface.

Noise
One meter away from - and 1.6 meter above the exhaust the noise level of a valve actuator will be approximately 77db(A) without noise damper and approximately 72 db(A) with damper - Measured at 7 bars air-pressure.

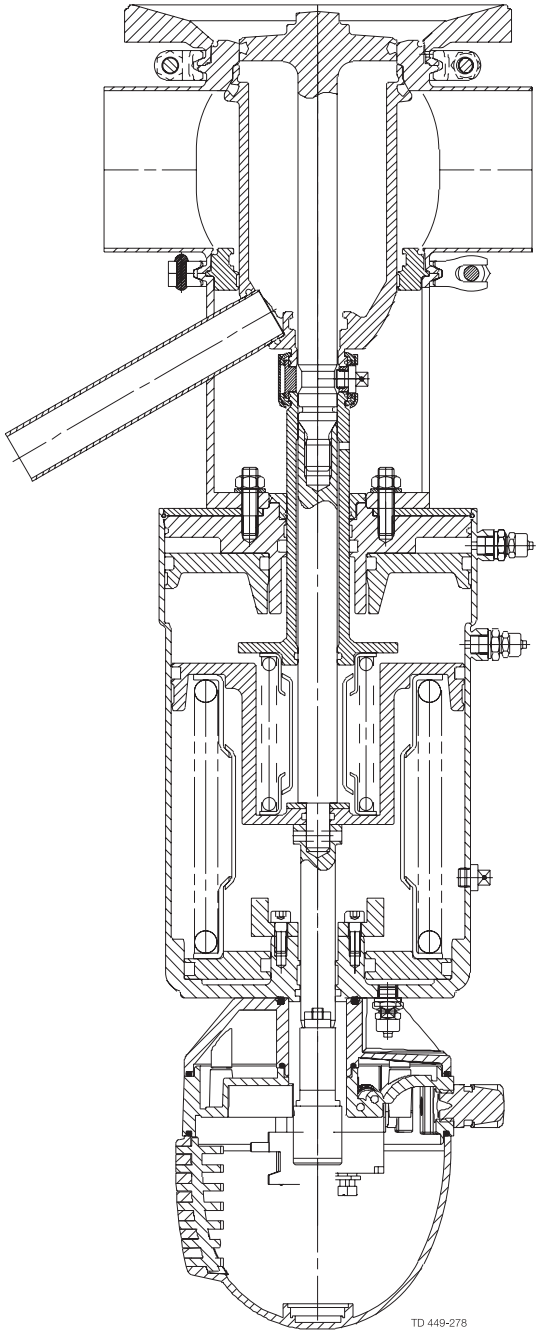
TD 449-278

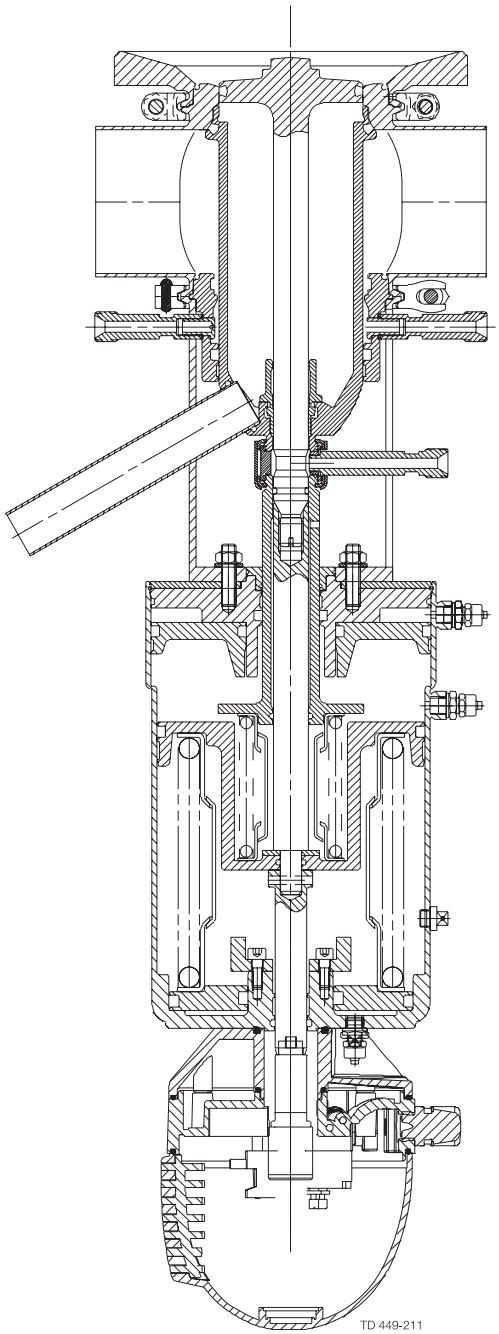

Unique-TO **with external cleaning**

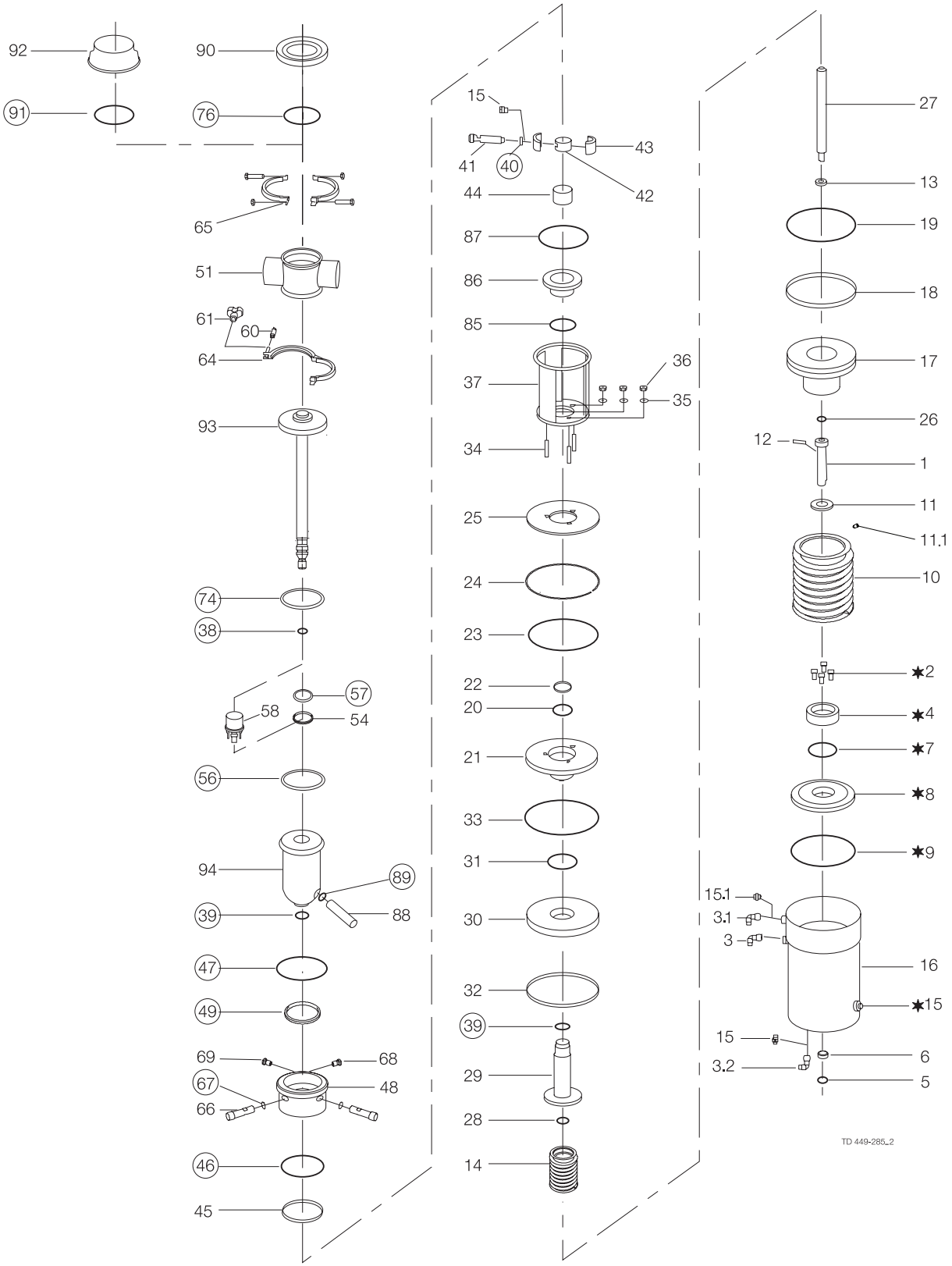

◯ = Wear parts

✶ = Positions not present on actuator ø120

The drawing and the parts list include all items.

Parts list

Pos.	Qty.	Denomination
1	1	Upper stem
2✶	4	Screw
3	1	Air fitting
3.1	1	Air fitting
3.2	1	Air fitting
4✶	1	Stop for upper piston
5	1	O-ring
6	1	Guide ring, Turcite
7✶	1	O-ring
8✶	1	Upper piston
9✶	1	O-ring
10	1	Spring assembly
11	1	Distance spacer
11.1	1	Pivot screw
12	1	Pin
13	1	Washer
14	1	Spring assembly
15	1	Plug
15.1	1	Plug
16	1	Cylinder
17	1	Main piston
18	1	Guide ring, Turcite
19	1	O-ring
20	1	O-ring
21	1	Bottom
22	1	Guide ring, Turcite
23	1	O-ring
24	1	Retaining ring
25	1	Cover disk
26	1	O-ring
27	1	Inner stem
28	1	O-ring
29	1	Piston rod
30	1	Lower piston
31	1	O-ring
32	1	Guide ring, Turcite
33	1	O-ring
34	3	Bolt
35	3	Washer
36	3	Nut
37	1	Intermediate piece
38	1	O-ring
39	2	O-ring
40	1	O-ring
41	1	Flushing tube
42	1	Spindle liner
43	2	Clamp
44	1	Lock
45	1	Guide ring
46	1	O-ring
47	1	O-ring
48	1	Sealing element
49	1	Lip seal
51	1	Valve body, upper
54	1	Guide ring
56	1	Seal ring
57	1	Lip seal
58	1	Spray nozzle
60	1	Hexnut
61	1	Wingnut (US version)
64	1	Clamp without nut
65	1	Clamp with screws
66	2	Flushing tube
67	2	O-ring
68	1	Drain
69	1	Nozzle
74	1	Seal ring
85	1	O-ring
86	1	Plug
87	1	O-ring
88	1	Tube
89	1	O-ring
90	1	Tank flange
91	1	O-ring
92	1	Stub flange
93	1	Tank plug
94	1	Balanced plug

NOTE!

✶ Positions not present on actuator OD: ø120

Actuator OD: ø120

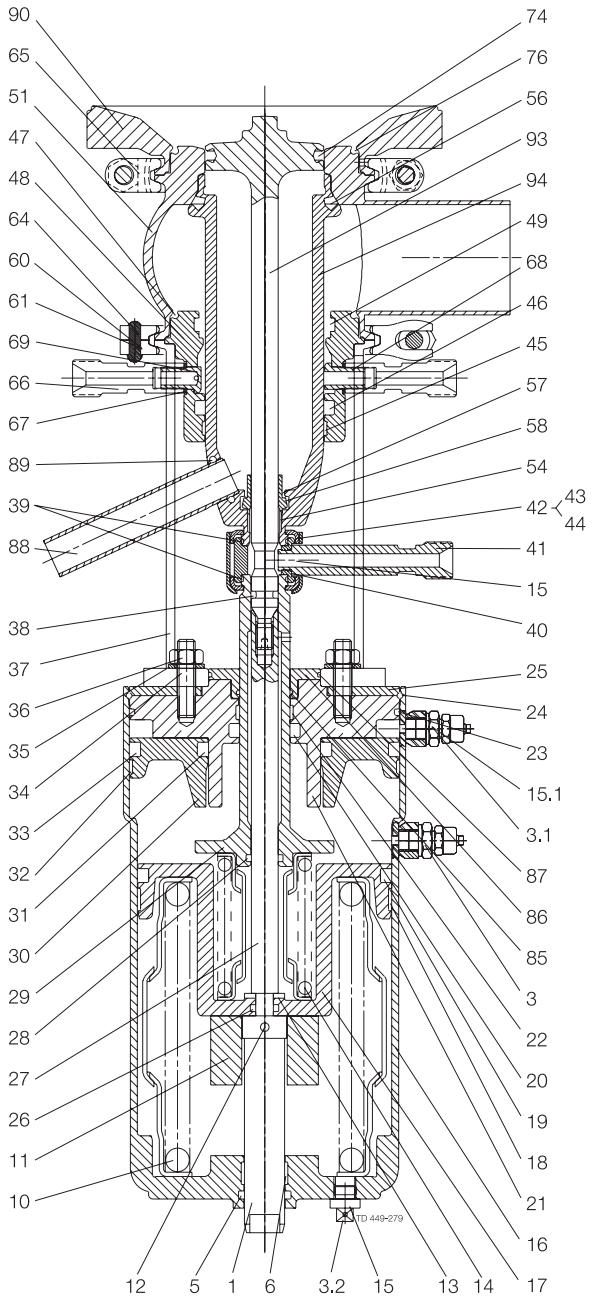

Actuator OD: ø157/ø186

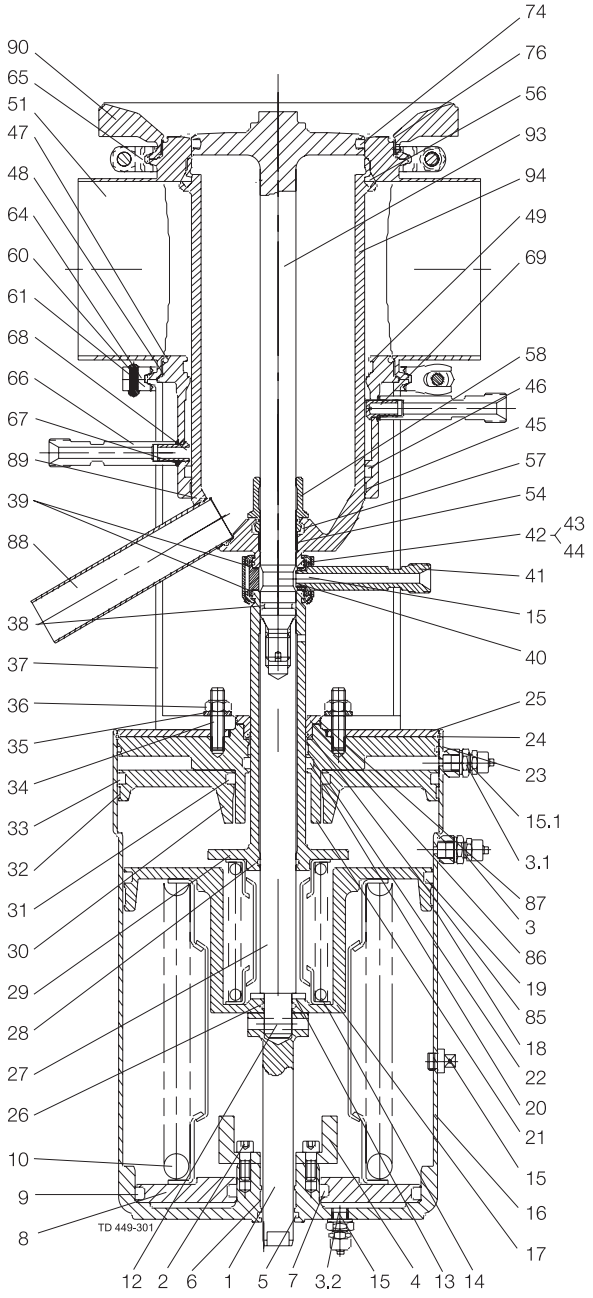

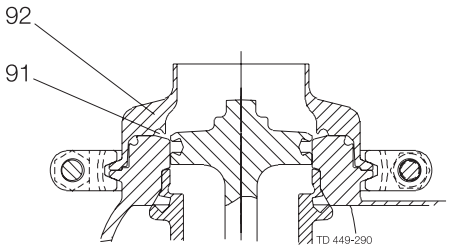

The drawing and the parts list include all items.

Parts list

Pos.	Qty.	Denomination
1	1	Upper stem
2✶	4	Screw
3	1	Air fitting
3.1	1	Air fitting
3.2	1	Air fitting
4✶	1	Stop for upper piston
5	1	O-ring
6	1	Guide ring, Turcite
7✶	1	O-ring
8✶	1	Upper piston
9✶	1	O-ring
10	1	Spring assembly
11	1	Distance spacer
11.1	1	Pivot screw
12	1	Pin
13	1	Washer
14	1	Spring assembly
15	1	Plug
15.1	1	Plug
16	1	Cylinder
17	1	Main piston
18	1	Guide ring, Turcite
19	1	O-ring
20	1	O-ring
21	1	Bottom
22	1	Guide ring, Turcite
23	1	O-ring
24	1	Retaining ring
25	1	Cover disk
26	1	O-ring
27	1	Inner stem
28	1	O-ring
29	1	Piston rod
30	1	Lower piston
31	1	O-ring
32	1	Guide ring, Turcite
33	1	O-ring
34	3	Bolt
35	3	Washer
36	3	Nut
37	1	Intermediate piece
38	1	O-ring
39	2	O-ring
40	1	O-ring
41	1	Flushing tube
42	1	Spindle liner
43	2	Clamp
44	1	Lock
45	1	Guide ring
46	1	O-ring
47	1	O-ring
48	1	Sealing element
49	1	Lip seal
51	1	Valve body, upper
54	1	Guide ring
56	1	Seal ring
57	1	Lip seal
58	1	Spray nozzle
60	1	Hexnut
61	1	Wingnut (US version)
64	1	Clamp without nut
65	1	Clamp with screws
66	2	Flushing tube
67	2	O-ring
68	1	Drain
69	1	Nozzle
74	1	Seal ring
85	1	O-ring
86	1	Plug
87	1	O-ring
88	1	Tube
89	1	O-ring
90	1	Tank flange
91	1	O-ring
92	1	Stub flange
93	1	Tank plug
94	1	Balanced plug

NOTE!

✶ Positions not present on actuator ø120

The drawings and the parts list include all items.

Denomination	Item number
Tank Flange	
Plug set-up 6	
51 mm/DN50	
EPDM	9611-92-6449
NBR	9611-92-6450
FPM	9611-92-6451
HNBR	9611-92-6452
63.5-76.1 mm/DN65-DN80	
EPDM	9611-92-6453
NBR	9611-92-6454
FPM	9611-92-6455
HNBR	9611-92-6456
101.6 mm/DN100	
EPDM	9611-92-6457
NBR	9611-92-6458
FPM	9611-92-6459
HNBR	9611-92-6460
DN125 - DN150	
EPDM	9611-92-6461
NBR	9611-92-6462
FPM	9611-92-6463
HNBR	9611-92-6464
Plug set-up 12	
51 mm/DN50	
EPDM	9611-92-6433
NBR	9611-92-6434
FPM	9611-92-6435
HNBR	9611-92-6436
63.5-76.1 mm/DN65-DN80	
EPDM	9611-92-6437
NBR	9611-92-6438
FPM	9611-92-6439
HNBR	9611-92-6440
101.6 mm/DN100	
EPDM	9611-92-6441
NBR	9611-92-6442
FPM	9611-92-6443
HNBR	9611-92-6444
DN125 - DN150	
EPDM	9611-92-6445
NBR	9611-92-6446
FPM	9611-92-6447
HNBR	9611-92-6448

Denomination	Item number
Stub Flange	
Plug set-up 6	
51 mm/DN50	
EPDM	9611-92-6481
NBR	9611-92-6482
FPM	9611-92-6483
HNBR	9611-92-6484
63.5-76.1 mm/DN65-DN80	
EPDM	9611-92-6485
NBR	9611-92-6486
FPM	9611-92-6487
HNBR	9611-92-6488
101.6 mm/DN100	
EPDM	9611-92-6489
NBR	9611-92-6490
FPM	9611-92-6491
HNBR	9611-92-6492
DN125 - DN150	
EPDM	9611-92-6493
NBR	9611-92-6494
FPM	9611-92-6495
HNBR	9611-92-6496
Plug set-up 12	
51 mm/DN50	
EPDM	9611-92-6465
NBR	9611-92-6466
FPM	9611-92-6467
HNBR	9611-92-6468
63.5-76.1 mm/DN65-DN80	
EPDM	9611-92-6469
NBR	9611-92-6470
FPM	9611-92-6471
HNBR	9611-92-6472
101.6 mm/DN100	
EPDM	9611-92-6473
NBR	9611-92-6474
FPM	9611-92-6475
HNBR	9611-92-6476
DN125 - DN150	
EPDM	9611-92-6477
NBR	9611-92-6478
FPM	9611-92-6479
HNBR	9611-92-6480

Plug set-up 6

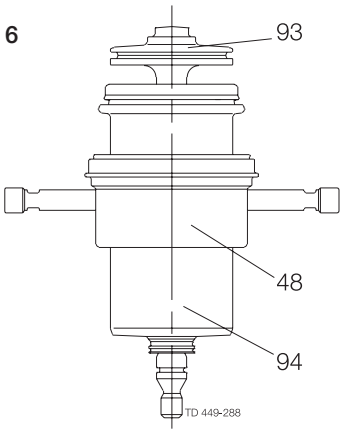

Plug set-up 12